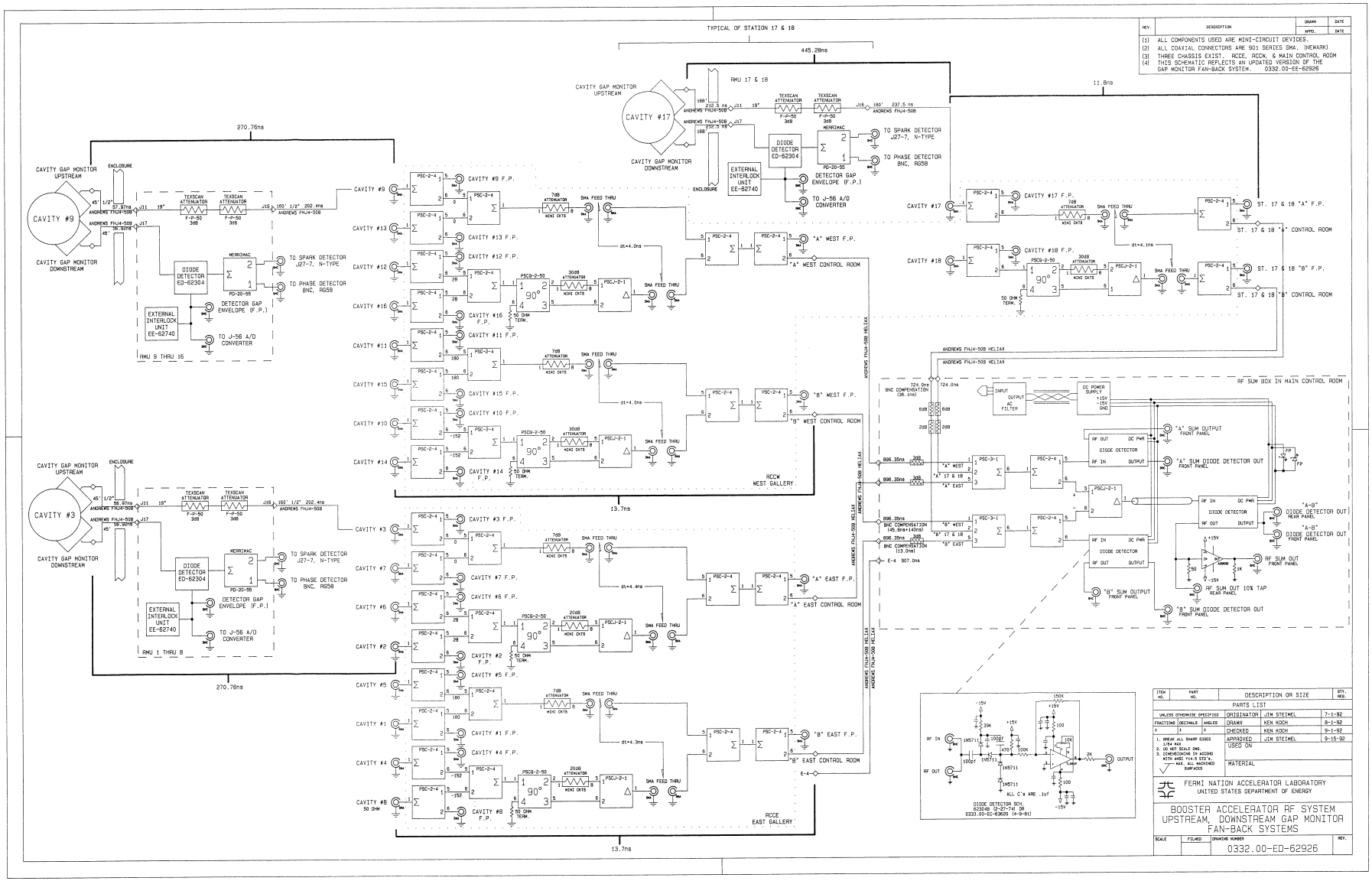

REV.	DESCRIPTION	DRAWN	DATE
		APPD.	DATE

(1) ALL COMPONENTS USED ARE MINI-CIRCUIT DEVICES.
(2) ALL COAXIAL CONNECTORS ARE 901 SERIES SMA. (NEWARK)
(3) THREE CHASSIS EXIST. RCCE, RCCW, & MAIN CONTROL ROOM
(4) THIS SCHEMATIC REFLECTS AN UPDATED VERSION OF THE GAP MONITOR FAN-BACK SYSTEM. 0332.00-EE-62926

ITEM NO.	PART NO.	DESCRIPTION OR SIZE	QTY. REQ.

PARTS LIST

UNLESS OTHERWISE SPECIFIED

FRACTIONS	DECIMALS	ANGLES
1	1	1

1. BREAK ALL SHARP EDGES 1/64 MAX
2. DO NOT SCALE DWG.
3. DIMENSIONING IN ACCORD WITH ANSI Y14.5 STD'S.
MAX. ALL MACHINED SURFACES

ORIGINATOR	JIM STEIMEL	7-1-92
DRAWN	KEN KOCH	8-1-92
CHECKED	KEN KOCH	9-1-92
APPROVED	JIM STEIMEL	9-15-92

USED ON

MATERIAL

FERMI NATION ACCELERATOR LABORATORY
UNITED STATES DEPARTMENT OF ENERGY

BOOSTER ACCELERATOR RF SYSTEM
UPSTREAM, DOWNSTREAM GAP MONITOR
FAN-BACK SYSTEMS

SCALE	FILMED	DRAWING NUMBER	REV.
		0332.00-ED-62926	