# Calculation of Useable Sampling Frequency Ranges and Analog IF Frequencies for MI RF Comb Filters

11/14/2006

T.Berenc, B.Chase

**Introduction:** This note documents the calculation of useable sampling frequency ranges and analog IF frequencies for use in comb filters for the MI RF upgrade of the Proton Plan. The range of useable sampling frequencies is influenced by considerations of undersampling, maintaining signal bandwidth, and preserving certain rational relationships using the unique factorization of the MI harmonic number to realize filtering at revolution harmonics. The useable analog IF frequencies are calculated based upon preserving certain rational relationships between the various frequency components needed to realize different functions.

## Calculation of Sampling Frequency Ranges

From the accordion folded paper analogy of aliasing shown in Fig. 1, the constraint on the sampling frequency, $f_s$, used in sampling a band-limited process with center frequency $f_{RF}$ and bandwidth $BW$ is given by:

$$\frac{2f_{RF}+BW}{n+1} < f_s < \frac{2f_{RF}-BW}{n},$$

where $n=\{0,1,\ldots n_{\max}\}$ is a subset of the non-negative integers with $n_{\max}$ being the last value of $n$ for which the above inequality can be satisfied. The case of $n=0$ gives the classical criterion that the sampling frequency has to be at least twice the highest frequency component of the original spectrum.

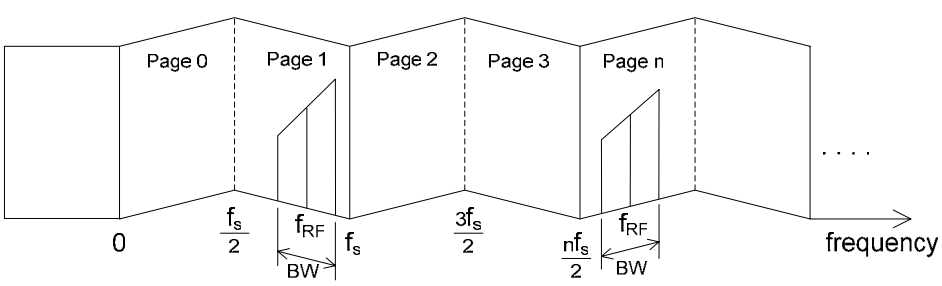


**Figure 1: Accordion folded paper analogy of aliasing**

The allowable sampling ranges for various bandwidths at $f_{RF} = 53\,MHz$ are given in Table 1:

**Table 1:** Allowable sampling frequencies $f_s$ : $f_{s\min} < f_s < f_{s\max}$ for various bandwidths at $f_{RF} = 53\,MHz$

| | BW = 4 MHz | | BW = 6 MHz | | BW = 8 MHz | | BW = 10 MHz | | BW = 12 MHz | |
|---|---|---|---|---|---|---|---|---|---|---|
| n | $f_{s\,min}$ (MHz) | $f_{s\,max}$ (MHz) | $f_{s\,min}$ (MHz) | $f_{s\,max}$ (MHz) | $f_{s\,min}$ (MHz) | $f_{s\,max}$ (MHz) | $f_{s\,min}$ (MHz) | $f_{s\,max}$ (MHz) | $f_{s\,min}$ (MHz) | $f_{s\,max}$ (MHz) |
| 0 | 110.000 | ∞ | 112.000 | ∞ | 114.000 | ∞ | 116.000 | ∞ | 118.000 | ∞ |
| 1 | 55.000 | 102.000 | 56.000 | 100.000 | 57.000 | 98.000 | 58.000 | 96.000 | 59.000 | 94.000 |
| 2 | 36.667 | 51.000 | 37.333 | 50.000 | 38.000 | 49.000 | 38.667 | 48.000 | 39.333 | 47.000 |
| 3 | 27.500 | 34.000 | 28.000 | 33.333 | 28.500 | 32.667 | 29.000 | 32.000 | 29.500 | 31.333 |
| 4 | 22.000 | 25.500 | 22.400 | 25.000 | 22.800 | 24.500 | 23.200 | 24.000 | | |
| 5 | 18.333 | 20.400 | 18.667 | 20.000 | 19.000 | 19.600 | | | | |
| 6 | 15.714 | 17.000 | 16.000 | 16.667 | 16.286 | 16.333 | | | | |
| 7 | 13.750 | 14.571 | 14.000 | 14.286 | | | | | | |
| 8 | 12.222 | 12.750 | 12.444 | 12.500 | | | | | | |
| 9 | 11.000 | 11.333 | | | | | | | | |
| 10 | 10.000 | 10.200 | | | | | | | | |
| 11 | 9.167 | 9.273 | | | | | | | | |
| 12 | 8.462 | 8.500 | | | | | | | | |

If the spectrum of the original sampled process lies on an interval in which n is odd (odd numbered page of Fig.1), then the frequency order of the original spectrum will be reversed in the aliased version that lies within the interval for which n=0 (Page 0 of Fig.1). For n even, there is no frequency reversal. The center frequency, $f_{RF}$, of the original process will be shifted to a frequency, $f_{IF}$, within the n=0 interval where

$$f_{IF} = f_{RF} - n \cdot \frac{f_s}{2} \qquad \text{for n=0 or even}$$

$$f_{IF} = (n+1) \cdot \frac{f_s}{2} - f_{RF} \qquad \text{for n odd}$$

If we want to preserve a rational relationship between $f_s$ and $f_{RF}$ then the following relationships will hold:

$$f_s = \alpha \cdot f_{RF} \quad \text{where } \alpha = \frac{p}{q} \text{ with p and q being positive integers } (q \neq 0)$$

$$f_{IF} = \beta \cdot f_{RF} \quad \text{where } \beta = \frac{r}{s} \text{ with r and s being positive integers } (s \neq 0)$$

Thus,

$$\beta = 1 - \frac{n}{2} \cdot \alpha \qquad \text{for n=0 or even}$$

$$\beta = \frac{(n+1)}{2} \cdot \alpha - 1 \qquad \text{for n odd}$$

Additionally, in order to realize a one-turn delay, the final sampling frequency, $f_s^{DS}$, (which may be obtained by downsampling the original sampled process) must be an integer multiple of the beam revolution frequency, $f_{rev}$, such that:

$$f_s^{DS} = \frac{L}{M} \cdot f_s = k \cdot f_{rev}$$

Where $\frac{L}{M}$ denotes a rational downsampling factor that can be achieved by upsampling by $L$ and downsampling by $M$. If a rational relationship exists between $f_s$ and $f_{RF}$ as discussed previously, then

$$k = \frac{L}{M} \cdot \frac{p}{q} \cdot h$$

where h is the machine harmonic number, $f_{RF} = h \cdot f_{rev}$. Thus for $k$ to be an integer, $M \cdot q$ must be a factor of $L \cdot p \cdot h$.

The unique factorization for the MI harmonic number is:

$$h = 588 = 2^2 \cdot 3 \cdot 7^2$$

**Case 1**: no downsampling, $\frac{L}{M} = 1$

$$k = p \cdot \frac{2^2 \cdot 3 \cdot 7^2}{q}$$

| q | p | $f_s$ | $f_{IF}$ | k | n |
|---|---|---|---|---|---|
| 4 | 3 | 39.750 | 13.250 | 441 | 2 |
| 6 | 5 | 44.167 | 8.833 | 490 | 2 |
| 7 | 6 | 45.429 | 7.571 | 504 | 2 |
| 12 | 10 | 44.167 | 8.833 | 490 | 2 |
| | | | | | |
| 3 | 4 | 70.667 | 17.667 | 784 | 1 |
| 4 | 5 | 66.250 | 13.250 | 735 | 1 |
| 6 | 7 | 61.833 | 8.833 | 686 | 1 |
| 7 | 8 | 60.571 | 7.571 | 672 | 1 |
| 12 | 14 | 61.833 | 8.833 | 686 | 1 |

**Case 2**: downsampling, $\frac{L}{M} = \frac{1}{2}$

$$k = p \cdot \frac{2 \cdot 3 \cdot 7^2}{q}$$

| q | p | $f_s$ | $f_{IF}$ | $f^{DS}_s$ | k | n |
|---|---|---|---|---|---|---|
| 6 | 5 | 44.167 | 8.833 | 22.083 | 490 | 2 |
| 7 | 6 | 45.429 | 7.571 | 22.714 | 504 | 2 |
| 12 | 10 | 44.167 | 8.833 | 22.083 | 490 | 2 |
| | | | | | | |
| 3 | 4 | 70.667 | 17.667 | 35.333 | 784 | 1 |
| 6 | 7 | 61.833 | 8.833 | 30.917 | 686 | 1 |
| 7 | 8 | 60.571 | 7.571 | 30.286 | 672 | 1 |
| 12 | 14 | 61.833 | 8.833 | 30.917 | 686 | 1 |

**Case 3**: downsampling, $\frac{L}{M} = \frac{1}{3}$

$$k = p \cdot \frac{2^2 \cdot 7^2}{q}$$

| q | p | $f_s$ | $f_{IF}$ | $f^{DS}_s$ | k |
|---|---|---|---|---|---|
| 4 | 3 | 39.750 | 13.250 | 13.250 | 441 |
| 7 | 6 | 45.429 | 7.571 | 15.143 | 504 |
| 14 | 13 | 49.214 | 3.786 | 16.405 | 546 |
| | | | | | |
| 4 | 5 | 66.250 | 13.250 | 22.083 | 735 |
| 7 | 8 | 60.571 | 7.571 | 20.190 | 672 |
| 12 | 14 | 61.833 | 8.833 | 20.611 | 686 |

## Analog IF Architecture

An analog IF architecture can be used instead of under-sampling. In this scenario, the gap monitor is mixed down in quadrature via an LO source to an IF frequency before being sampled by the digital hardware. The digital filtering can be performed on the signal at the IF frequency if the IF frequency is chosen to be an integer multiple of the revolution frequency. After digital filtering, the quadrature signals at the IF are mixed back up to the RF frequency and recombined.

Again, rational relationships between the RF frequency, $f_{RF}$, and both the LO source frequency, $f_{LO}$, and the IF frequency, $f_{IF}$ may facilitate the design.

$$f_{IF} = f_{RF} - f_{LO} \qquad \text{if } f_{LO} < f_{RF}$$
$$f_{IF} = f_{LO} - f_{RF} \qquad \text{if } f_{LO} > f_{RF}$$

If

$$f_{LO} = \alpha \cdot f_{RF} \quad \text{where } \alpha = \frac{p}{q} \text{ with p and q being positive integers } (q \neq 0)$$

$$f_{IF} = \beta \cdot f_{RF} \quad \text{where } \beta = \frac{r}{s} \text{ with r and s } (s > r) \text{ being positive integers } (s \neq 0)$$

then

$$\beta = 1 - \alpha \qquad \text{if } f_{LO} < f_{RF}$$
$$\beta = \alpha - 1 \qquad \text{if } f_{LO} > f_{RF}$$

To eliminate harmonics of the IF signal from generating noise at the RF frequency, $\beta$ should be chosen, such that $\frac{1}{\beta}$ is not equal to an integer. This implies that $r \neq 1$.

Furthermore, the LO frequency can be used as the sampling frequency if it is an integer multiple of the revolution frequency, $f_{rev}$. This would facilitate creating the one turn delay. Additionally, if the IF frequency is also chosen to be an integer multiple of the revolution frequency, then there would be no need to digitally downsample before applying the comb filtering which is inherently periodic at the revolution frequency. To design a notch at the RF fundamental requires a digital BPF instead of a digital HPF in the case of downsampling to DC. Thus, additional design constraints on the frequency choices are:

$$f_s = f_{LO} = k \cdot f_{rev} \quad \text{AND} \quad f_{IF} = u \cdot f_{rev} \quad \text{where k and u are positive integers}$$

But since $f_{rev} = \frac{f_{RF}}{h}$, it is clear that $k = \frac{p}{q} \cdot h$.

Summarizing:

$$f_s = f_{LO} = \frac{p}{q} \cdot f_{RF} = k \cdot f_{rev} = \frac{k}{2^2 \cdot 3 \cdot 7^2} \cdot f_{RF}$$

$$f_{IF} = \frac{r}{s} \cdot f_{RF} = u \cdot f_{rev} = \frac{u}{2^2 \cdot 3 \cdot 7^2} \cdot f_{RF}$$

$$k = \frac{p}{q} \cdot 2^2 \cdot 3 \cdot 7^2 \quad \text{Choose } q \text{ to be a factor of } h = 2^2 \cdot 3 \cdot 7^2$$

Sample frequency choices:

**Table 2:** Analog IF architecture frequency choices for $f_{LO} < f_{RF} = 53MHz$

| p | q | α | $f_s=f_{LO}$ | $f_{IF}$ | k | u | β | r | s |
|---|---|---|---|---|---|---|---|---|---|
| 5 | 7 | 0.714286 | 37.857 | 15.143 | 420 | 168 | 0.285714 | 2 | 7 |
| 11 | 14 | 0.785714 | 41.643 | 11.357 | 462 | 126 | 0.214286 | 3 | 14 |
| 16 | 21 | 0.761905 | 40.381 | 12.619 | 448 | 140 | 0.238095 | 5 | 21 |
| 17 | 21 | 0.809524 | 42.905 | 10.095 | 476 | 112 | 0.190476 | 4 | 21 |
| 19 | 21 | 0.904762 | 47.952 | 5.048 | 532 | 56 | 0.095238 | 2 | 21 |
| 19 | 28 | 0.678571 | 35.964 | 17.036 | 399 | 189 | 0.321429 | 9 | 28 |
| 23 | 28 | 0.821429 | 43.536 | 9.464 | 483 | 105 | 0.178571 | 5 | 28 |
| 25 | 28 | 0.892857 | 47.321 | 5.679 | 525 | 63 | 0.107143 | 3 | 28 |
| 31 | 42 | 0.738095 | 39.119 | 13.881 | 434 | 154 | 0.261905 | 11 | 42 |
| 37 | 42 | 0.880952 | 46.690 | 6.310 | 518 | 70 | 0.119048 | 5 | 42 |
| 39 | 49 | 0.795918 | 42.184 | 10.816 | 468 | 120 | 0.204082 | 10 | 49 |
| 40 | 49 | 0.816327 | 43.265 | 9.735 | 480 | 108 | 0.183673 | 9 | 49 |
| 41 | 49 | 0.836735 | 44.347 | 8.653 | 492 | 96 | 0.163265 | 8 | 49 |
| 43 | 49 | 0.877551 | 46.510 | 6.490 | 516 | 72 | 0.122449 | 6 | 49 |
| 44 | 49 | 0.897959 | 47.592 | 5.408 | 528 | 60 | 0.102041 | 5 | 49 |
| 45 | 49 | 0.918367 | 48.673 | 4.327 | 540 | 48 | 0.081633 | 4 | 49 |
| 46 | 49 | 0.938776 | 49.755 | 3.245 | 552 | 36 | 0.061224 | 3 | 49 |
| 47 | 49 | 0.959184 | 50.837 | 2.163 | 564 | 24 | 0.040816 | 2 | 49 |
| 83 | 98 | 0.846939 | 44.888 | 8.112 | 498 | 90 | 0.153061 | 15 | 98 |
| 85 | 98 | 0.867347 | 45.969 | 7.031 | 510 | 78 | 0.132653 | 13 | 98 |
| 87 | 98 | 0.887755 | 47.051 | 5.949 | 522 | 66 | 0.112245 | 11 | 98 |
| 89 | 98 | 0.908163 | 48.133 | 4.867 | 534 | 54 | 0.091837 | 9 | 98 |
| 93 | 98 | 0.94898 | 50.296 | 2.704 | 558 | 30 | 0.05102 | 5 | 98 |
| 121 | 147 | 0.823129 | 43.626 | 9.374 | 484 | 104 | 0.176871 | 26 | 147 |
| 122 | 147 | 0.829932 | 43.986 | 9.014 | 488 | 100 | 0.170068 | 25 | 147 |
| 124 | 147 | 0.843537 | 44.707 | 8.293 | 496 | 92 | 0.156463 | 23 | 147 |
| 125 | 147 | 0.85034 | 45.068 | 7.932 | 500 | 88 | 0.14966 | 22 | 147 |
| 127 | 147 | 0.863946 | 45.789 | 7.211 | 508 | 80 | 0.136054 | 20 | 147 |
| 130 | 147 | 0.884354 | 46.871 | 6.129 | 520 | 68 | 0.115646 | 17 | 147 |
| 131 | 147 | 0.891156 | 47.231 | 5.769 | 524 | 64 | 0.108844 | 16 | 147 |
| 133 | 147 | 0.904762 | 47.952 | 5.048 | 532 | 56 | 0.095238 | 14 | 147 |
| 134 | 147 | 0.911565 | 48.313 | 4.687 | 536 | 52 | 0.088435 | 13 | 147 |
| 136 | 147 | 0.92517 | 49.034 | 3.966 | 544 | 44 | 0.07483 | 11 | 147 |
| 137 | 147 | 0.931973 | 49.395 | 3.605 | 548 | 40 | 0.068027 | 10 | 147 |
| 142 | 147 | 0.965986 | 51.197 | 1.803 | 568 | 20 | 0.034014 | 5 | 147 |

**Table 3:** Analog IF architecture frequency choices for $f_{LO} > f_{RF} = 53MHz$

| p | q | α | $f_s=f_{LO}$ | $f_{IF}$ | k | u | β | r | s |
|---|---|---|---|---|---|---|---|---|---|
| 5 | 3 | 1.666667 | 88.333 | 35.333 | 980 | 392 | 0.666667 | 2 | 3 |
| 7 | 4 | 1.75 | 92.750 | 39.750 | 1029 | 441 | 0.75 | 3 | 4 |
| 9 | 7 | 1.285714 | 68.143 | 15.143 | 756 | 168 | 0.285714 | 2 | 7 |
| 10 | 7 | 1.428571 | 75.714 | 22.714 | 840 | 252 | 0.428571 | 3 | 7 |
| 17 | 12 | 1.416667 | 75.083 | 22.083 | 833 | 245 | 0.416667 | 5 | 12 |
| 19 | 12 | 1.583333 | 83.917 | 30.917 | 931 | 343 | 0.583333 | 7 | 12 |
| 17 | 14 | 1.214286 | 64.357 | 11.357 | 714 | 126 | 0.214286 | 3 | 14 |
| 19 | 14 | 1.357143 | 71.929 | 18.929 | 798 | 210 | 0.357143 | 5 | 14 |
| 23 | 14 | 1.642857 | 87.071 | 34.071 | 966 | 378 | 0.642857 | 9 | 14 |
| 23 | 21 | 1.095238 | 58.048 | 5.048 | 644 | 56 | 0.095238 | 2 | 21 |
| 25 | 21 | 1.190476 | 63.095 | 10.095 | 700 | 112 | 0.190476 | 4 | 21 |
| 26 | 21 | 1.238095 | 65.619 | 12.619 | 728 | 140 | 0.238095 | 5 | 21 |
| 31 | 28 | 1.107143 | 58.679 | 5.679 | 651 | 63 | 0.107143 | 3 | 28 |
| 33 | 28 | 1.178571 | 62.464 | 9.464 | 693 | 105 | 0.178571 | 5 | 28 |
| 34 | 28 | 1.214286 | 64.357 | 11.357 | 714 | 126 | 0.214286 | 3 | 14 |
| 47 | 42 | 1.119048 | 59.310 | 6.310 | 658 | 70 | 0.119048 | 5 | 42 |
| 51 | 49 | 1.040816 | 55.163 | 2.163 | 612 | 24 | 0.040816 | 2 | 49 |
| 52 | 49 | 1.061224 | 56.245 | 3.245 | 624 | 36 | 0.061224 | 3 | 49 |
| 53 | 49 | 1.081633 | 57.327 | 4.327 | 636 | 48 | 0.081633 | 4 | 49 |
| 54 | 49 | 1.102041 | 58.408 | 5.408 | 648 | 60 | 0.102041 | 5 | 49 |
| 55 | 49 | 1.122449 | 59.490 | 6.490 | 660 | 72 | 0.122449 | 6 | 49 |
| 57 | 49 | 1.163265 | 61.653 | 8.653 | 684 | 96 | 0.163265 | 8 | 49 |
| 58 | 49 | 1.183673 | 62.735 | 9.735 | 696 | 108 | 0.183673 | 9 | 49 |
| 59 | 49 | 1.204082 | 63.816 | 10.816 | 708 | 120 | 0.204082 | 10 | 49 |
| 60 | 49 | 1.22449 | 64.898 | 11.898 | 720 | 132 | 0.22449 | 11 | 49 |
| 101 | 98 | 1.030612 | 54.622 | 1.622 | 606 | 18 | 0.030612 | 3 | 98 |
| 103 | 98 | 1.05102 | 55.704 | 2.704 | 618 | 30 | 0.05102 | 5 | 98 |
| 105 | 98 | 1.071429 | 56.786 | 3.786 | 630 | 42 | 0.071429 | 7 | 98 |
| 107 | 98 | 1.091837 | 57.867 | 4.867 | 642 | 54 | 0.091837 | 9 | 98 |
| 109 | 98 | 1.112245 | 58.949 | 5.949 | 654 | 66 | 0.112245 | 11 | 98 |
| 111 | 98 | 1.132653 | 60.031 | 7.031 | 666 | 78 | 0.132653 | 13 | 98 |
| 113 | 98 | 1.153061 | 61.112 | 8.112 | 678 | 90 | 0.153061 | 15 | 98 |
| 115 | 98 | 1.173469 | 62.194 | 9.194 | 690 | 102 | 0.173469 | 17 | 98 |
| 117 | 98 | 1.193878 | 63.276 | 10.276 | 702 | 114 | 0.193878 | 19 | 98 |
| 119 | 98 | 1.214286 | 64.357 | 11.357 | 714 | 126 | 0.214286 | 21 | 98 |
| 121 | 98 | 1.234694 | 65.439 | 12.439 | 726 | 138 | 0.234694 | 23 | 98 |

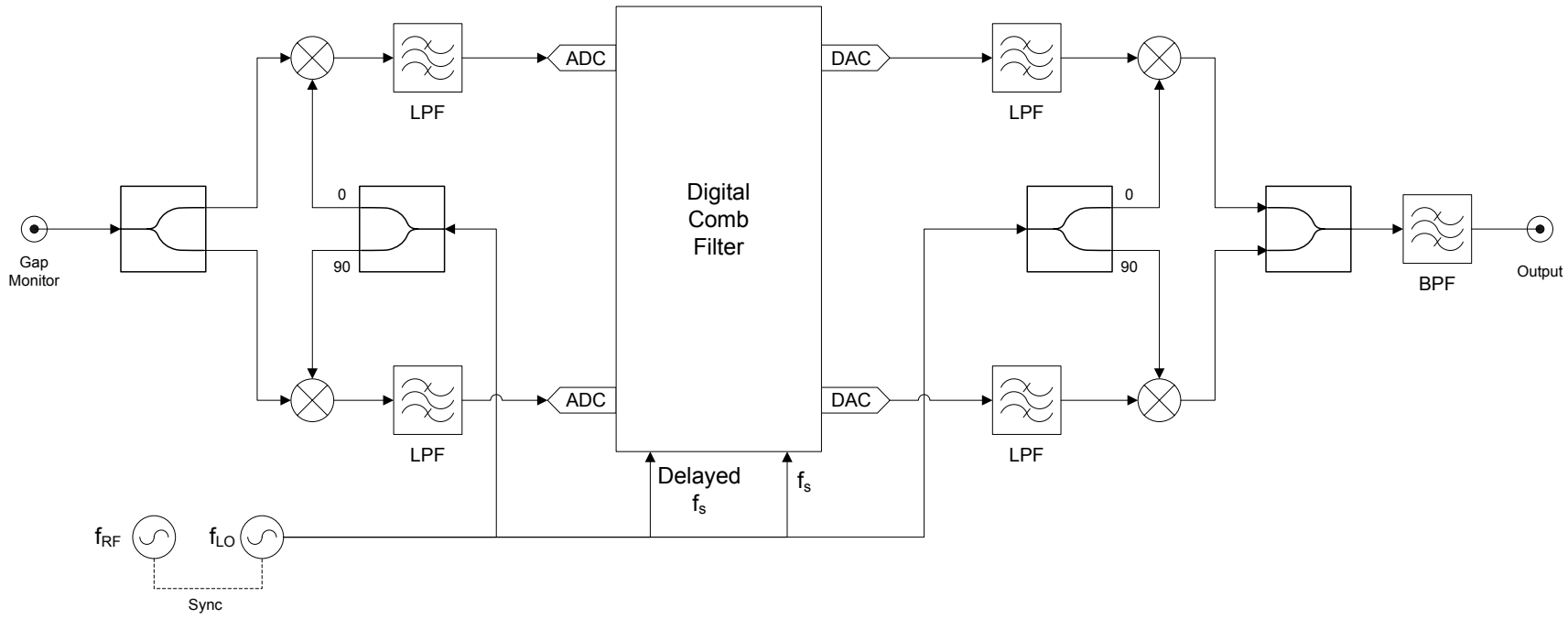


**Figure 2:** Simplified block diagram for an analog IF architecture